THIS DOCUMENT AND THE DATA DISCLOSED HEREIN OR HEREWITH IS THE PROPERTY OF ALTIUM LIMITED AND MAY BE FREELY DISTRIBUTED IN WHOLE. NO RIGHTS ARE RESERVED OR EXPRESS OR IMPLIED WARANTEE GIVEN.

REVISION	DESCRIPTION	DATE	APPROVED

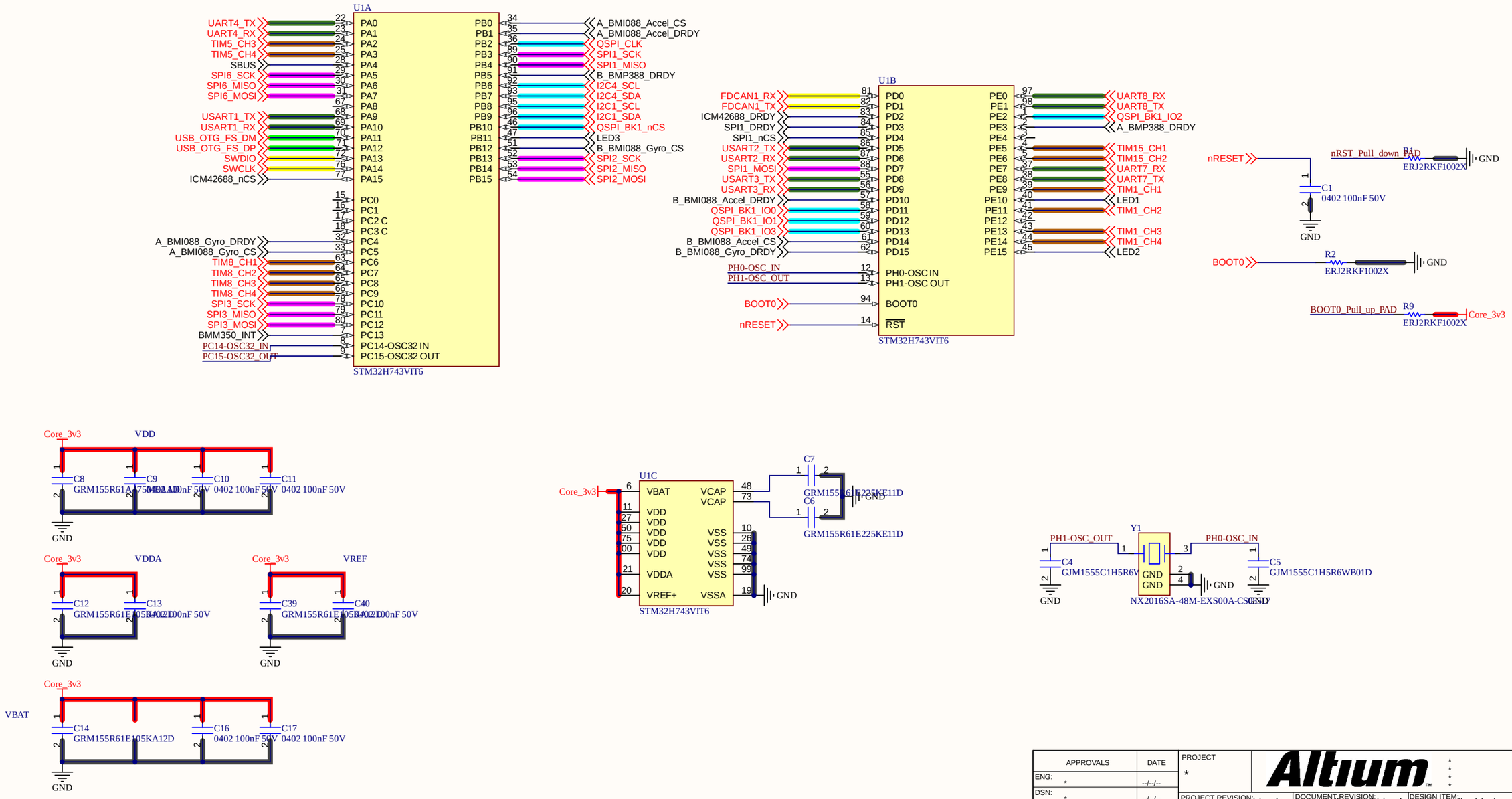

APPROVALS		DATE
ENG:	*	--/--/--
DSN:	*	--/--/--
CHK:	*	--/--/--

REFERENCE DOCUMENTS

BOM:	<BOM DOC NO>
ASSY DWG:	<ASSY DWG NO>
FAB DWG:	<FAB DWG NO>
PCB DWG:	<PCB DWG NO>

PROJECT: *

Altium

PROJECT REVISION: Version control disabled | DOCUMENT REVISION: | DESIGN ITEM: Version control disabled

TITLE: *

SIZE	CAGE CODE	DWG NO.	REV
A3	?????	<SCH DWG NO>	

SCALE: | FILE NAME: mcu.SchDoc | SHEET 1 OF 4

THIS DOCUMENT AND THE DATA DISCLOSED HEREIN OR HEREWITH IS THE PROPERTY OF ALTIUM LIMITED AND MAY BE FREELY DISTRIBUTED IN WHOLE. NO RIGHTS ARE RESERVED OR EXPRESS OR IMPLIED WARANTEE GIVEN.

REVISION	DESCRIPTION	DATE	APPROVED

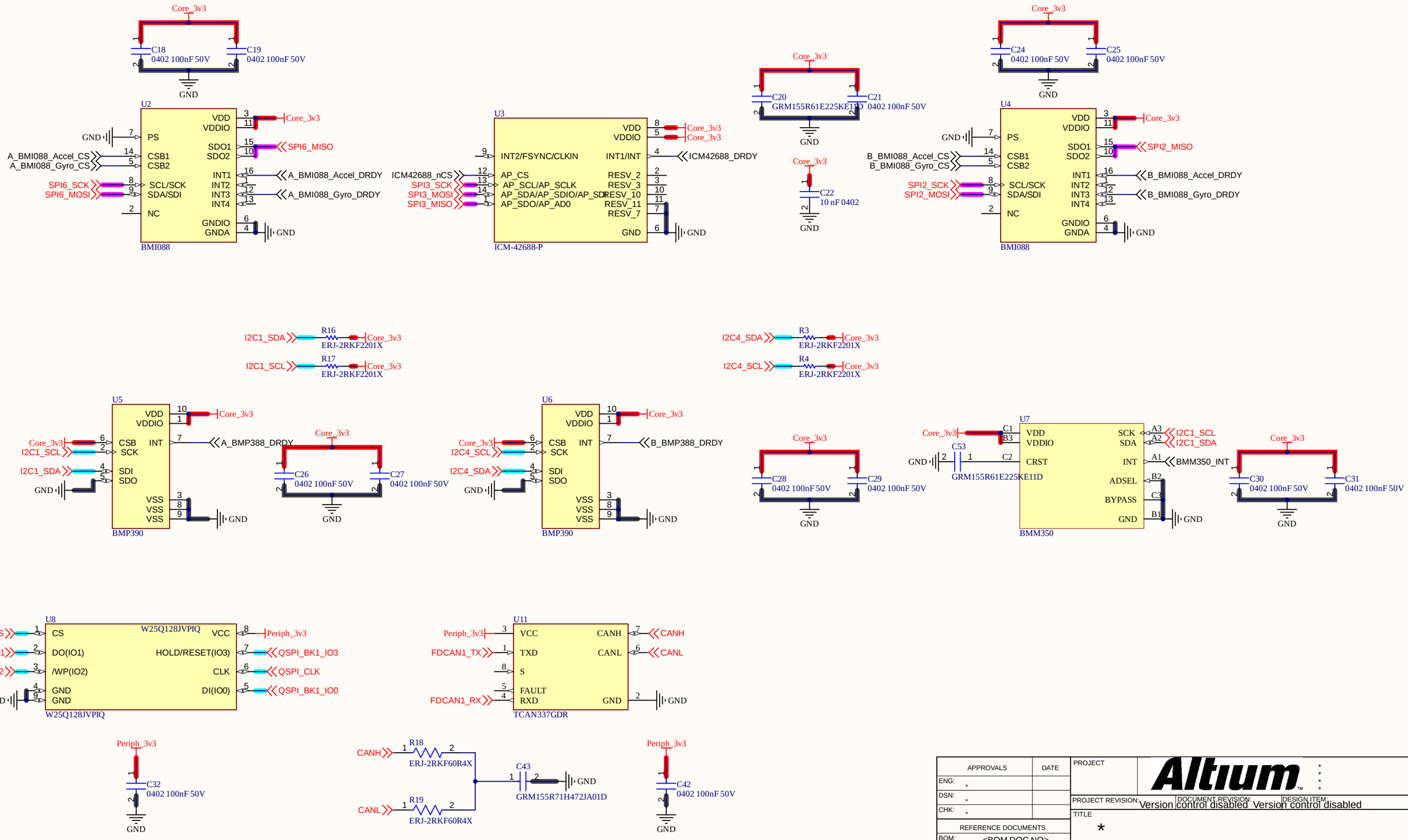

APPROVALS	DATE
ENG: *	
DSN: *	
CHK: *	

REFERENCE DOCUMENTS

BOM:	<BOM DOC NO>
ASSY DWG:	<ASSY DWG NO>
FAB DWG:	<FAB DWG NO>
PCB DWG:	<PCB DWG NO>

PROJECT: Altium *

PROJECT REVISION: Version control disabled | DOCUMENT REVISION: | DESIGN ITEM: Version control disabled

TITLE: *

SIZE	CAGE CODE	DWG NO.	REV
A3	?????	<SCH DWG NO>	

SCALE: | FILE NAME: sensors.SchDoc | SHEET 2 OF 4

THIS DOCUMENT AND THE DATA DISCLOSED HEREIN OR HEREWITH IS THE PROPERTY OF ALTIUM LIMITED AND MAY BE FREELY DISTRIBUTED IN WHOLE. NO RIGHTS ARE RESERVED OR EXPRESS OR IMPLIED WARANTEE GIVEN.

REVISION	DESCRIPTION	DATE	APPROVED

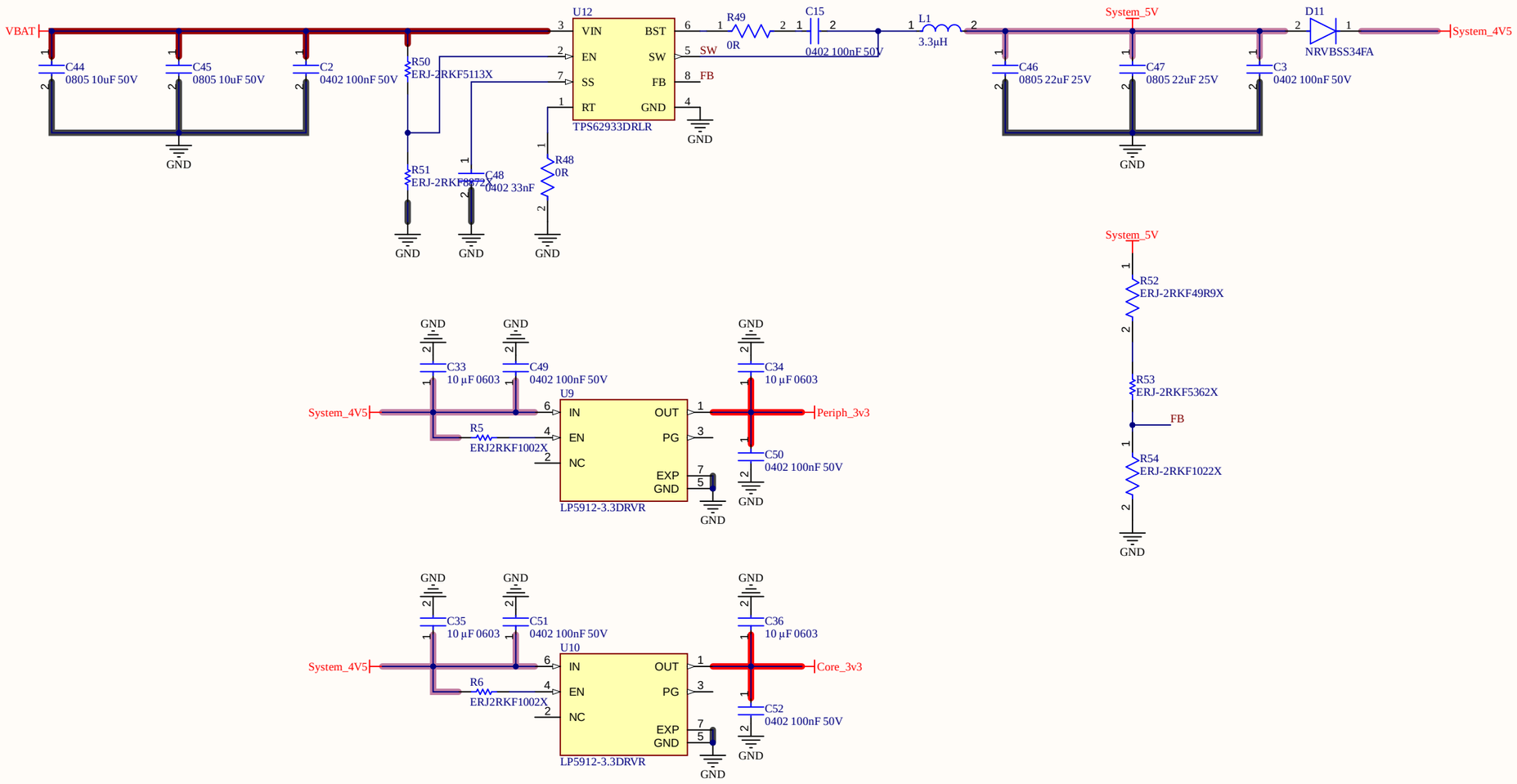

APPROVALS	DATE
ENG: *	
DSN: *	
CHK: *	

REFERENCE DOCUMENTS

BOM:	<BOM DOC NO>
ASSY DWG:	<ASSY DWG NO>
FAB DWG:	<FAB DWG NO>
PCB DWG:	<PCB DWG NO>

PROJECT: Altium *

PROJECT REVISION: Version control disabled | DOCUMENT REVISION: | DESIGN ITEM: Version control disabled

TITLE: *

SIZE	CAGE CODE	DWG NO.	REV
A3	?????	<SCH DWG NO>	

SCALE: | FILE NAME: power.SchDoc | SHEET 3 OF 4

THIS DOCUMENT AND THE DATA DISCLOSED HEREIN OR HEREWITH IS THE PROPERTY OF ALTIUM LIMITED AND MAY BE FREELY DISTRIBUTED IN WHOLE. NO RIGHTS ARE RESERVED OR EXPRESS OR IMPLIED WARANTEE GIVEN.

REVISION	DESCRIPTION	DATE	APPROVED

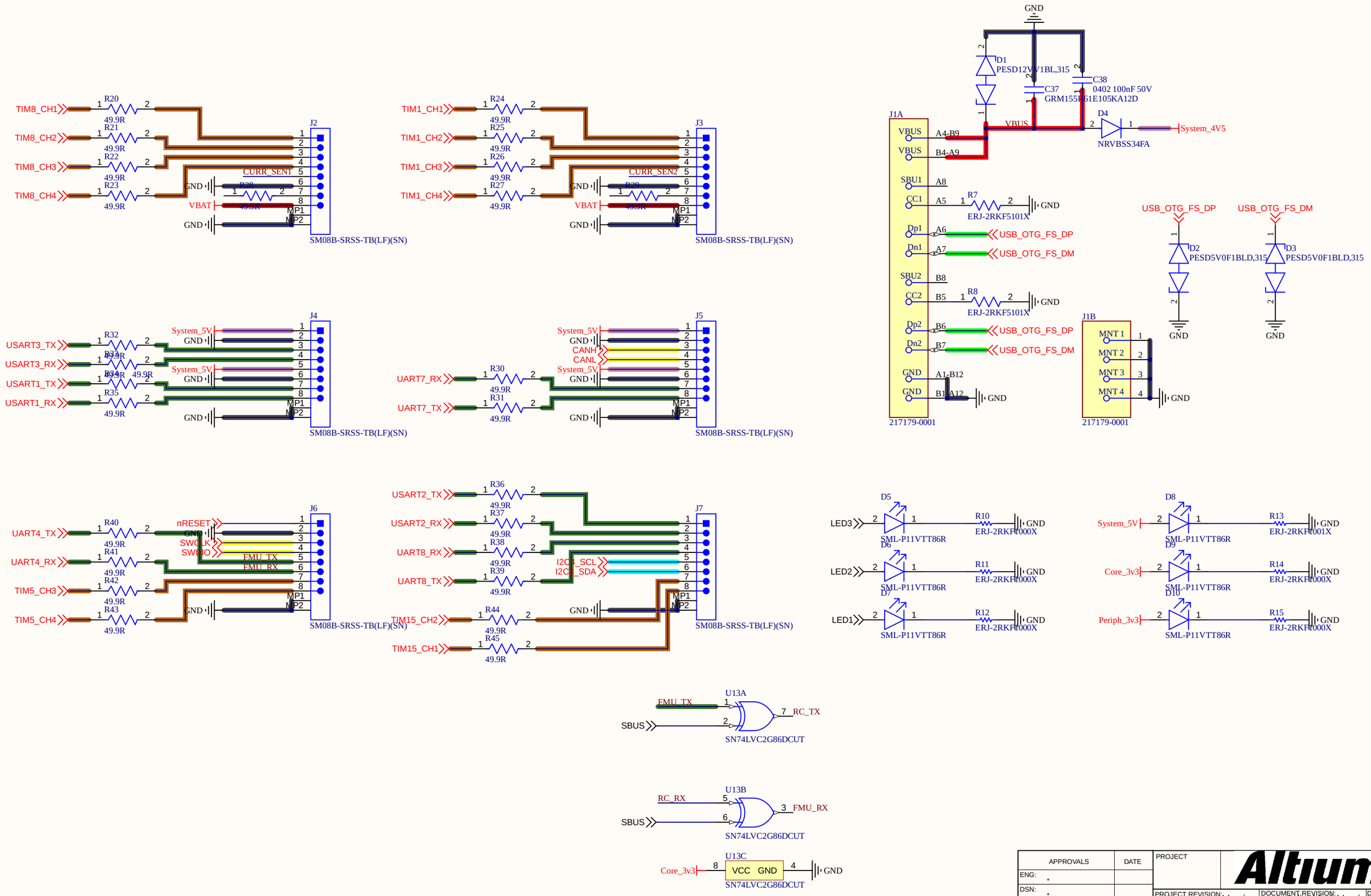

APPROVALS	DATE
ENG: *	
DSN: *	
CHK: *	

REFERENCE DOCUMENTS

BOM:	<BOM DOC NO>
ASSY DWG:	<ASSY DWG NO>
FAB DWG:	<FAB DWG NO>
PCB DWG:	<PCB DWG NO>

PROJECT: Altium

PROJECT REVISION: Version control disabled | DOCUMENT REVISION: Version control disabled | DESIGN ITEM:

TITLE: *

SIZE	CAGE CODE	DWG NO.	REV
A3	?????	<SCH DWG NO>	

SCALE: | FILE NAME: ports.SchDoc | SHEET 4 OF 4